USER MANUAL

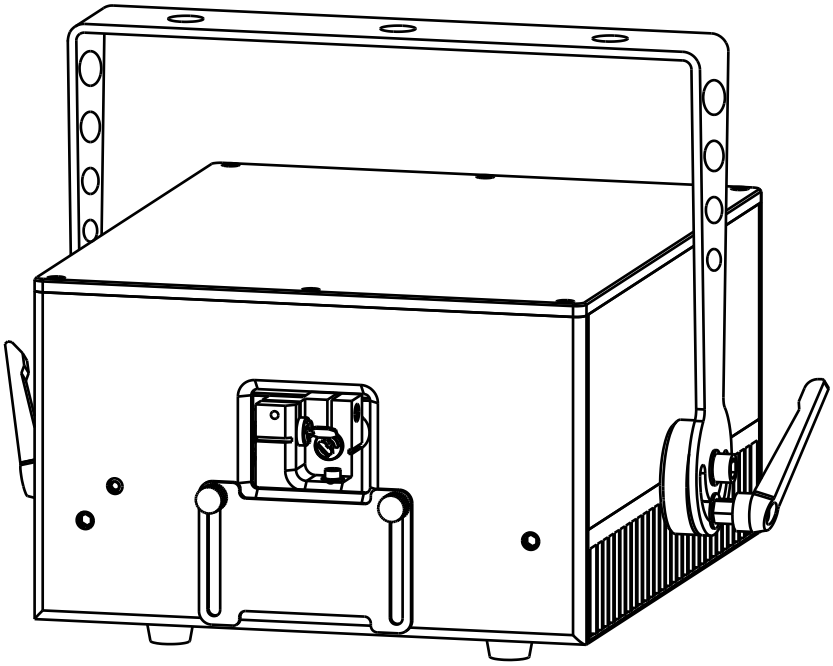

Thank you very much for choosing our product, for your safety, Please read this manual carefully before your operation. This manual included installation and using information. Please install and operate it according to the requirement of this manual.

1. WHAT IS INCLUDED

1 X Flight Case Enclosure（selectable）
1 X RGB laser projector
1 X Power Cord
1 X Emergency Stop Control Box（selectable）
1 X Emergency Stop connecting cable
1 X Key for Emergency Stop Control Box
1 X Key for Projector lockout control
1 X User Manual

2. UNPACKING INSTRUCTIONS

Open the flight case/ carton box carefully unpack everything inside.
Ensure all parts are present and in good condition.
Do not use any equipment that appears to be damaged.

3. DIMENSIONS

All dimensions are given in millimeters

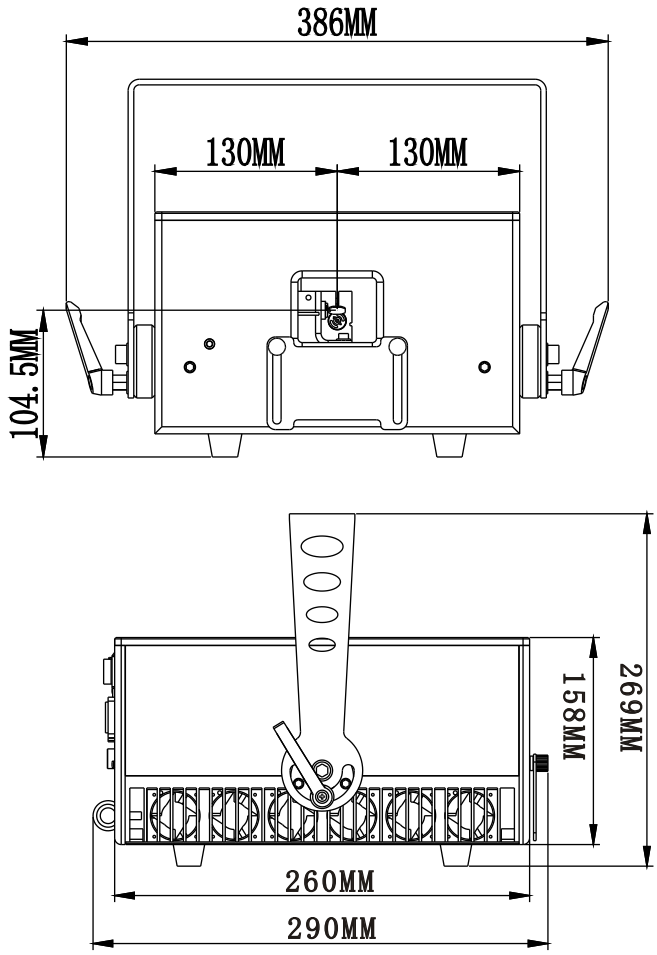

4. SAFETY NOTES

WARNING! This projector is a Class 4 laser product. It must neverbe used for audience-scanning applications. The output beam of the projector must always be at least 3 meters above the floor in the audience. See the Proper Operation section for further information

Please read the following notes carefully! They include important safety information about the installation, usage, and maintenance of this product

■Keep this User Manual for future consultation. If you sell this product to anotheruser, be sure that they also receive this document

■Always make sure that the voltage of the outlet to which you are connecting this product is within the range stated on the decal or rear panel of the product.

■Product is not designed for use outdoors in adverse weather conditions. To prevent risk of fire or shock, do not expose this product to rain or moisture.

■Always install this product in a location with adequate ventilation, at least 20 in (50 cm)from adjacent surfaces. Be sure that no ventilation slots are blocked.

■Always disconnect this product from the power source before cleaning it or replacing the fuse.

■Make sure to replace the fuse with another of the same type and rating.

■If mounting it overhead, always secure this product to a cfastening device using a safety chain or cable

■In the event of a serious coperating problem, stop using thec projector immediately.cNeverc try to repair the unit except in a controlled environment under trained supervision. Repairs carried out by unskilled people can lead to damage or malfunction of the unit,as well as exposure to dangerous laser light

■Never connect this product to a dimmer pack.

■Make sure the power cord is not crimped or damaged

■Never disconnect the power cord by pulling or any moving part. Always use the hanging/mounting bracket or the handles.Or tugging on the cord.

■Never carry a product from the power cord.

■Always avoid eye or skin exposure to direct or scattered light from this product

■Lasers can be hazardous and have unique safety considerations. Permanent eye injury and blindness is possible if lasers are used incorrectly. Pay close attention to each safety REMARK and WARNING statement in this user manual. Read all instructions carefully BEFORE operating this device

■Never intentionally expose yourself or others to direct laser light.

■this laser product can potentially cause instant eye injury or blindness if laser light directly strikes the eyes

■It is illegal and dangerous to shine this laser into audience areas, where the audience or other personnel could get direct laser beams or bright reflections into their eyes.

■It is a US Federal offense to shine any laser at aircraft.

■No service allowed by customer. There are no user serviceable parts inside the unit. Do not open the housing or attempt any repairs yourself.

■Service is only to be handled by the factory or authorized factory trained technicians.

■Product is not to be modified by the customer.

■**Caution** use of controls or adjustments or performance of procedures other thanthose specified herein may result in hazardous radiation exposure.

5. TECHNICAL SPECIFICATIONS

Laser:

Laser Classification: Class 4

Laser sources:DPSS laser/diode laser (green), diode (red / blue)

Beam diameter (1/e2):<4.0mm

Beam divergence (1/e2):<1.0mrad (full angle)

Laser Wave Length:445-640nm

Maximum total output power:<4, 000mW

Projector:

Scanner:40Kpps

Aperture:5mm

Scan angle:50degree,Max:70degree

Laser emission window:B+W antireflective coated

AC power input:110/230VAC / 50-60Hz

Input power:200W maximum

Max. ambient temperature:40°C

Min. ambient temperature:-5°C

Weight: 8kg

6. THE SPECIFICATION OF THE FRONT AND REAR PANEL

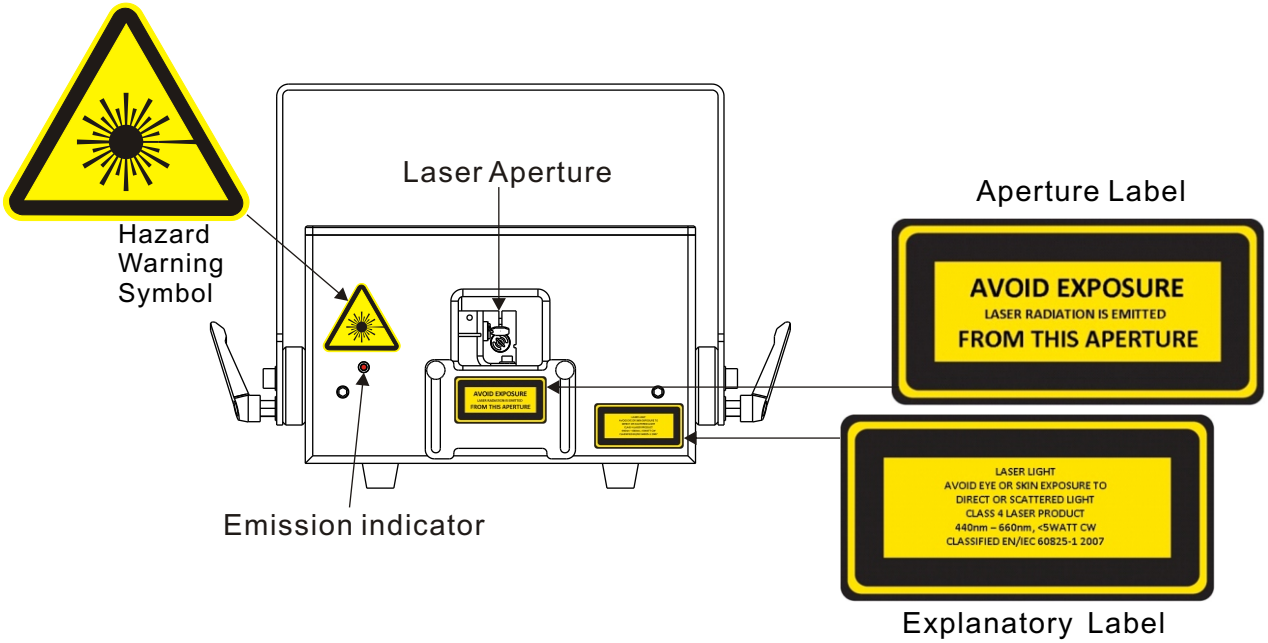

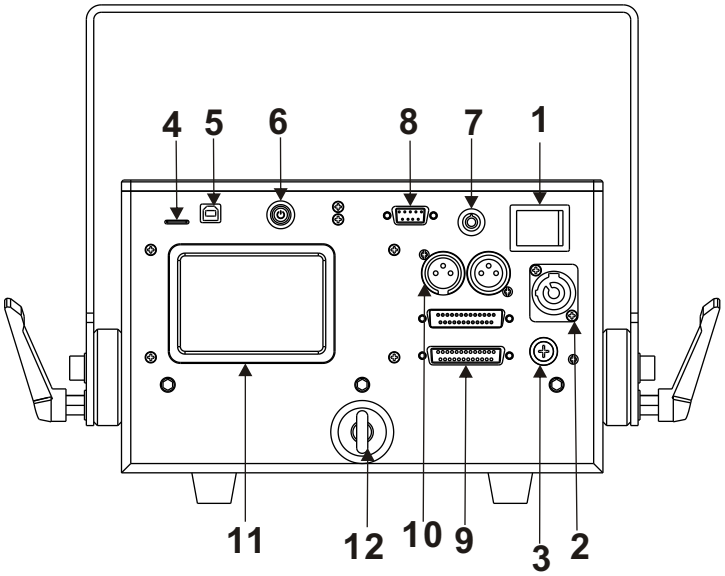

1. ON/OFF:POWER SWITCH
2. POWER INPUT IEC CONNECTOR
3. MAIN FUSEHOLDER
4. MEMORY CARD
5. PC VIA USB ADAPTER CABLE
6. SCREEN LOCK
7. PROJECTOR LOCKOUT KEYSWITCH
8. INTERLOCK SAFETY OUTPUT CONNECTOR
9. DB-25-PIN ILDA IN/ILDA OUT
10. 3-PIN CONNECTOR DMX IN/OUT
11. 3.5 INCH TOUCH SCREEN CONTROLLING SYSTEM
12. SAFETY SCREW

7. REMOTE INTERLOCK / REMOTE E-STOP SWITCH

Connect the remote E-stop controller to the 9-pin connector on the rear of the projector using a DB-9 cable. Ensure that the other end of the cable is firmly attached to the remote box, and tighten the screws on both ends of the cable to ensure the connection remains secure.

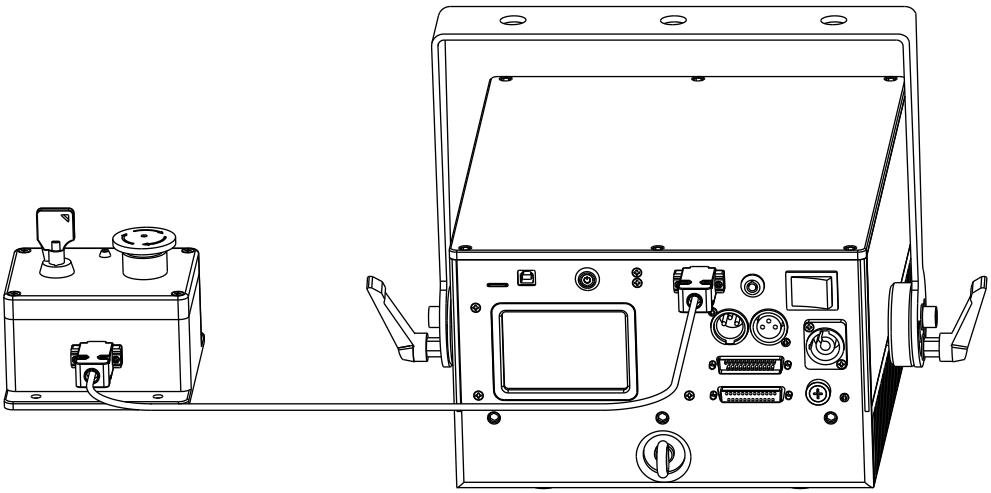

8. RIGGING

•Be sure that the structure onto which you are mounting this product can support its weight.

•Mount the product securely. You can do this with a screw, a nut, and a bolt. You may also use a mounting clamp if rigging this product onto a truss. The U-shaped support bracket has three mounting holes which may be used to secure the clamps to the projector.

•When mounting this product overhead, always use a safety cable.

•Always consider ease of access to the unit before deciding on a location for this product

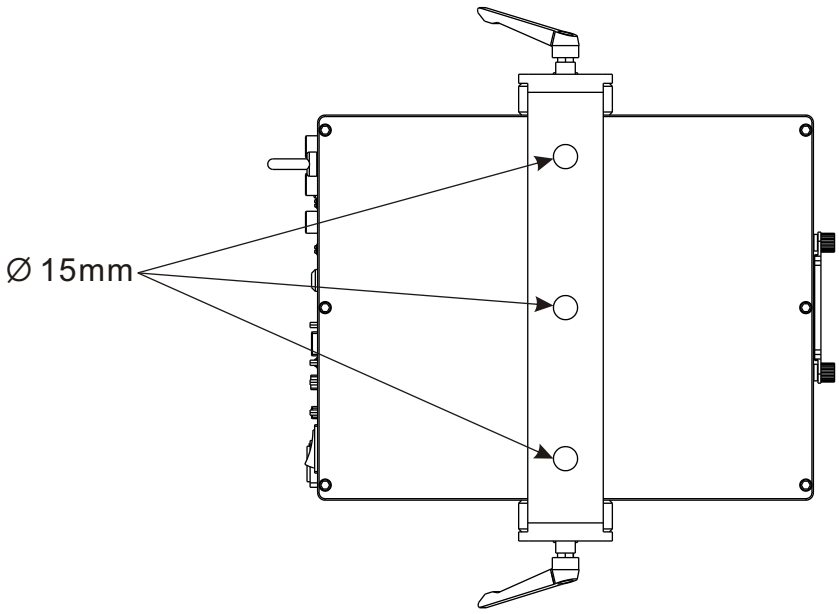

9. OPERATION OF U-TYPE BRACKET (DIFFERENT ANGLES)

1.Set the angle of the U-type bracket according to your installation

2.Monolateral angle of the U-type bracket is 0-180 degrees;
you can get 180-360 degrees by adjusting the position of the L-type screw.(As follows).

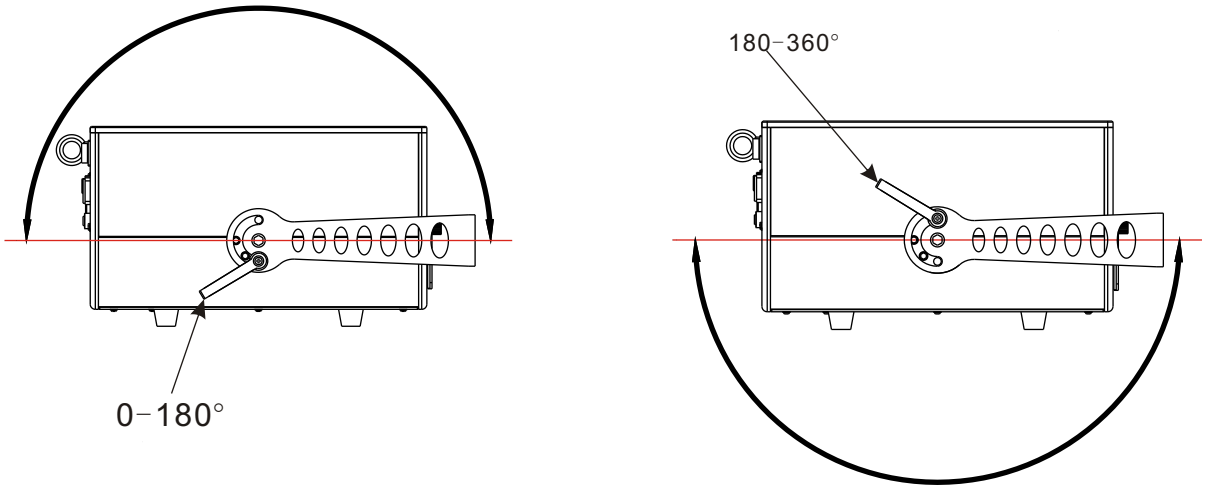

10. PROPER USE

This product is for overhead mounting only. For safety purposes, this projector should be mounted on steady elevated platforms or sturdy overhead supports using suitable hanging clamps. In all cases, you must use safety cables.

International laser safety regulations require that laser products must be operated in the fashion illustrated below, with a minimum of 3 meters (9.8 ft) of vertical separation between the floor and the lowest laser light vertically. Additionally, 3 meters of horizontal separation is required between laser light and audience or other public spaces.

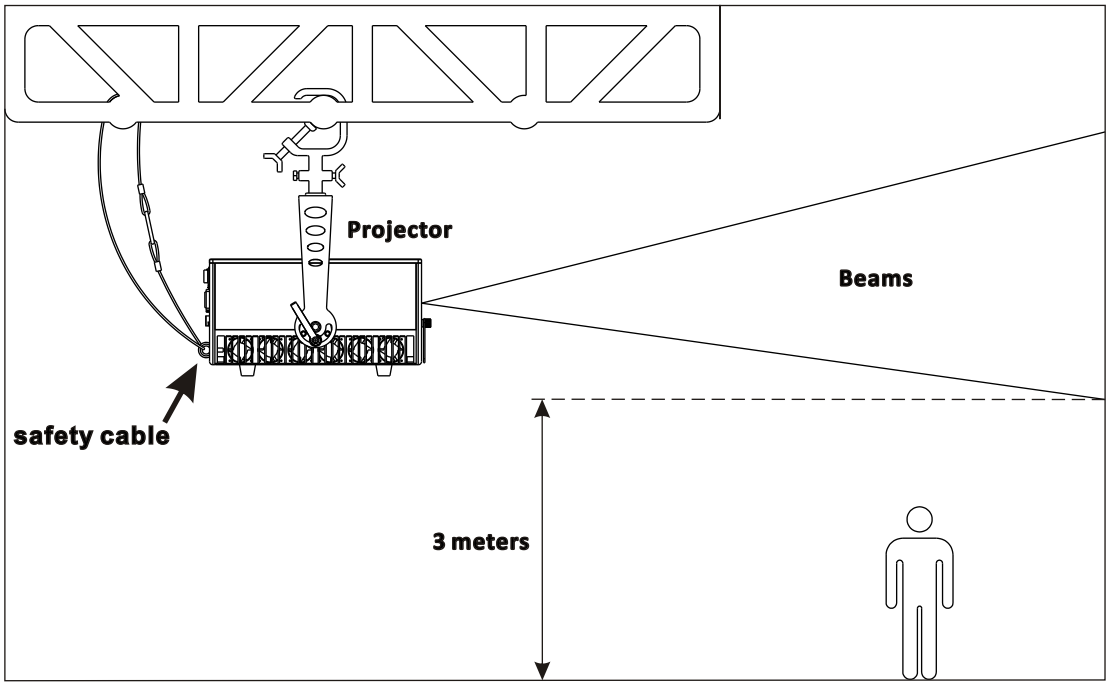

Caution – use of controls or adjustments or performance of procedures other than those specified herein may result in hazardous radiation exposure.

11. WIRING DIAGRAM

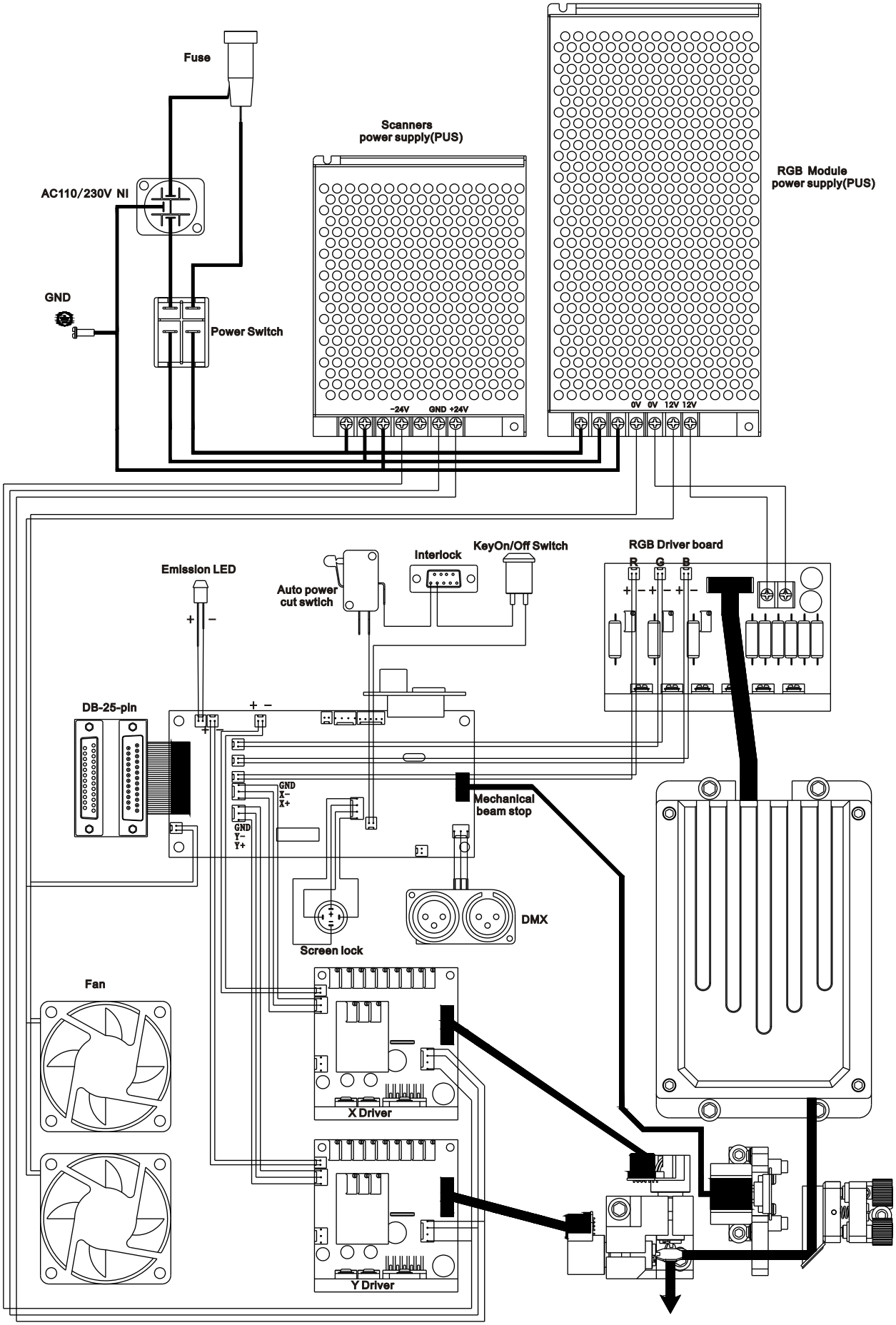

12. ILDA CONNECTION

Connect the projector to your controller using a standard 25-pin ILDA cable (DB-25).
Be sure to tighten the connecting screws to ensure the cable does not become disconnected.

This projector is wired to accept ILDA standard analog signals for X, Y and color information.
The ILDA standard uses a DB-25 cable to carry these signals from the controller to the projector.

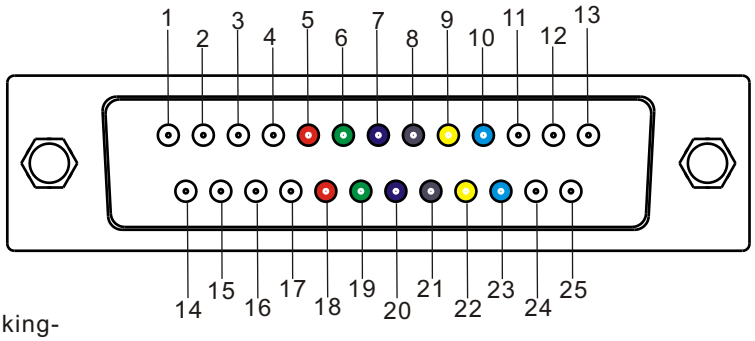

ILDA PINOUT

Pin:		Pin:	
1	X+	14	X-
2	Y+	15	Y-
3	Intensity/Blanking+	16	Intensity/Blanking-
4	Interlock A	17	Interlock B
5	Red+	18	Red-
6	Green+	19	Green-
7	Blue+	20	Blue-
8	Deep blue+	21	Deep blue-
9	Yellow+	22	Yellow-
10	Cyan+	23	Cyan-
11	Z+	24	Z-
12	Not connected	25	Ground
13	Shutter		

Above–DB25 male connector, viewed from front.

Below–DB25 female connector, viewed from front.

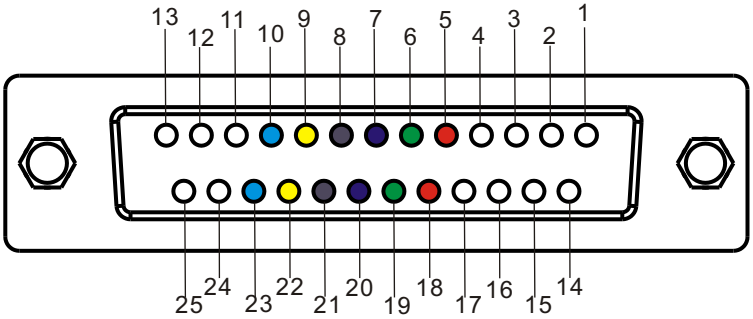

THE PROJECTORS ONLY USE THE FOLLOWING PINS:

PIN:		PIN:	
1	X+	14	X-
2	Y+	15	Y-
3	Intensity/Blanking+	16	Intensity/Blanking-
4	Interlock A	17	Interlock B
5	Red+	18	Red-
6	Green+	19	Green-
7	Blue+	20	Blue-
13	Shutter	25	Ground

13. SD CARD - DMX-512 CHANNEL ASSIGNMENT

BASIC CH1-CH4	CHANNEL 1 MODE	0-31		32-95				96-159					160-223			224-255	
		BLACKOUT		BASIC RANGE				STANDARD RANGE					EXTENDED RANGE			FULL RANGE	
	CHANNEL 2 PAGE	0-15	16-31	32-47	48-63	64-79	80-95	96-111	112-127	128-143	144-159	160-175	176-191	192-207	208-223	224-239	240-255
		1	2	3	4	5	6	7	8	9	10	11	12	13	14	15	16
	CHANNEL 3 CUE	0-31		CUE X=32..35, CUE 2=36..39, ……CUE 48=221..224												224-255	
		BLACKOUT		1 2 3 4 5 6 7											..48	REPEAT	
	CHANNEL 4 SPEED	0-15	16-31	32..	..64..		..128..						..192..		..255		
		100%	PAUSE	25%	50%		100%						150%		200%		
STANDARD CH1-CH11	CHANNEL 5 BRIGHTNESS (FULL)	..FULL BRIGHTNESS		0-255											BLANKING..		
	CHANNEL 6 BRIGHTNESS (RED)	..FULL BRIGHTNESS		0-255											BLANKING..		
	CHANNEL 7 BRIGHTNESS (GREEN)	..FULL BRIGHTNESS		0-255											BLANKING..		
	CHANNEL 8 BRIGHTNESS (BLUE)	..FULL BRIGHTNESS		0-255											BLANKING..		
	CHANNEL 9 ZOOM	..NORMAL		0-255											MINIMUM..		
EXTENDED CH1-CH15	CHANNEL 10 X SIZE	..NORMAL		0-255											MINIMUM..		
	CHANNEL 11 Y SIZE	..NORMAL		0-255											MINIMUM..		
	CHANNEL 12 Z ANGLE			0-255													
		0 DEGREES..													..360 DEGREE		
	CHANNEL 13 X POSITION			0-255													
		LEFT..													..RIGHT		
	CHANNEL 14 Y POSITION			0-255													
		DOWN..													..UP		
	CHANNEL 15 VISIBLE POINTS			0-255													
		NO VISIBLE POINTS..													..ALL POINTS VISIBLE		
FULL RANGE CH1-CH18	CHANNEL 16 SCAN RATE	0-31		32..												..255	
		DEFAULT		Slow..												..Fast	
	CHANNEL 17 RELEASE	0-31		32-95				96-159					160-223			224-255	
		DEFAULT		PAUSE				LOOP					NEXT			STOP	
	CHANNEL 18 COLOR	0-31		32-223												224-255	
		DEFAULT		RED - ORANGE - YELLOW - LIME - GREEN - CYAN - BLUE - PURPLE - PINK - RED												WHITE	